Wiring Diagram for Transformer

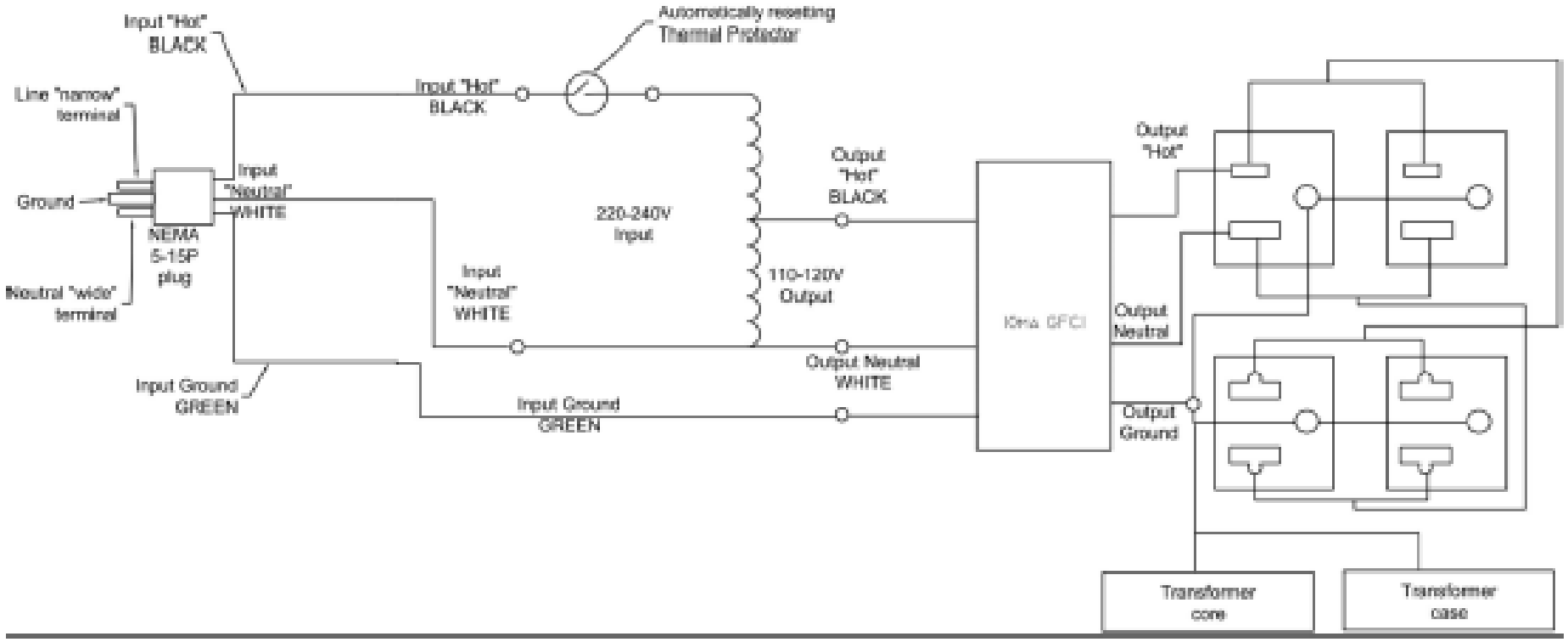

SJT
105°C
300V
3X2.0mm2(14AWG)